HAL
open science

Multidisciplinary Project Based Learning Within a Collaborative Framework A Case Study on Urban Drone Conception

Sebastien Jacques, Sébastien Bissey, Arnaud Martin

To cite this version:

Sebastien Jacques, Sébastien Bissey, Arnaud Martin. Multidisciplinary Project Based Learning Within a Collaborative Framework A Case Study on Urban Drone Conception. International Journal of Emerging Technologies in Learning (iJET), 2016, 11 (12), pp.36-44. 10.3991/ijet.v11i12.5996 . hal-01413316

HAL Id: hal-01413316

https://univ-tours.hal.science/hal-01413316

Submitted on 20 Dec 2016

HAL is a multi-disciplinary open access archive for the deposit and dissemination of scientific research documents, whether they are published or not. The documents may come from teaching and research institutions in France or abroad, or from public or private research centers.

L'archive ouverte pluridisciplinaire **HAL**, est destinée au dépôt et à la diffusion de documents scientifiques de niveau recherche, publiés ou non, émanant des établissements d'enseignement et de recherche français ou étrangers, des laboratoires publics ou privés.

Multidisciplinary Project Based Learning within a Collaborative Framework: a Case Study on Urban Drone Conception

doi:10.3991/ijet.v%vi%i.5996

S. Jacques[1,2], S. Bissey[2] and A. Martin[1]
[1]University of Tours, Polytech Tours, Electrical and Electronic Engineering Department, Tours, France
[2]University of Tours, Research group on Materials, Microelectronics, Acoustics and Nanotechnology, Tours, France

***Abstract*—This paper provides two years of experience of multidisciplinary PBL implemented in France in engineering education through a case study on urban drone conception.This research project was proceeded within a collaborative framework in which 3 specialties (electrical and electronic engineering, industrial computing, and mechanical engineering) of a graduate school of engineering and a start-up company are jointly involved for the first time.**

This article discusses knowledge and skills that the engineering students were expected to acquire at the end of the research project, and the methods of assessment. The designing, manufacturing, and experimental validation of the urban drone are described. The various steps in the project management, and the interactions with the students and partners (teachers and industrial partner) are particularly highlighted.

Qualitative and quantitative data were collected through questionnaires, student logbooks and reports. The results demonstrate that this experience is overwhelmingly positive since it empowers and enhances student learning.

***Index Terms*—Collaborative framework, multidisciplinary project-based learning, urban drone conception.**

I. INTRODUCTION

Since the implementation of the Bologna standards, many strategic changes have been made to European Higher Education including competency-based education [1], [2]. Today, competencies and learning outcomes are still two major pillars used to compare higher education between various countries and universities. One advantage of the competency-based learning (CBL) is that this approach is centered more on students [3], [4]. It means that they are the drivers of the educational process. This encourages them to develop critical and creative thinking, and promote interaction, while honing interpersonal skills [5].CBL has rapidly become an absolute requirement for accreditation organizations such as, for instance, the Engineering Degree Commission (CTI), which is responsible for the accreditation of engineering programs, the development of quality in engineering education, and the promotion of engineering curricula and careers in France and abroad (i.e. Belgium, Germany, Switzerland, Bulgaria, Viet-Nam, China, Morocco…) [6].

Nowadays, the management of research projects is one of the most effective ways of assessing students' curricular and cross-curricular competencies [7].Initiated by John Dewey over 100 years ago with the famous quote "learning by doing", project-based learning (PBL) has rapidly emerged as a dynamic approach to teaching. This method enables students to explore real problems and challenges of daily life, while boostingthe process of getting knowledge and skills, and the ability to work individually or in small collaborative groups [8], [9], [10].PBL, which is focused on students, is typically used in engineering curriculum since students are particularly driven by the need to design and create an end-product. The "need to know / need to do" principle also drives the learning process and inspires them to delve deeper into concepts.

Engineering schools and universities are regularly challenged to propose new teaching methods in order to find the best solutions to assess students' competencies and consequently improve the educational process [11]. Collaborative learning may be an interesting approach since it acts as a synchronous activity resulting from a continued attempt to construct and maintain a shared conception of a problem [12].According to Vygotsky's theory, which points out the collaboration between teacher and students, this method promotes interactivity, social context, and technologies [13].

This article critically reviewsa multidisciplinary PBL which has been recently implemented in the last year of an electronic engineering curriculum. The research project has been focused on the design and manufacturing of an urban drone. This kind of Unnamed Aerial Vehicle (UAV), whichhas jumped on popularity over the past few years, has already proven its worth as a robotic platform usable for research and education [14].The multidisciplinary nature of drone is without doubt since it crosses many disciplinary lines such as electronic engineering, mechanical engineering, and on-board computing. The ultimate challenge is here to bring this ambitious research project to a successful end, while ensuring the assessment of students' skills. In addition, the purpose is to relate for the first time 3 departments of a French engineering school, a faculty of science and engineering technology, and a start-up company through a collaborative partnership model.

This paper serves several purposes. First of all, the context of the research project is introduced. In particular, the objective is to get a better understanding of the ins and outs: the collaborative framework and particularly, the interactions with the different partners, the skills that were tested at various levels of the project and the methods used to assess the students' competencies. Then, the hardware

and software architectures of the urban drone are described. In particular, this section of the manuscript focuses on the students' work. Finally, a discussion is proposed to demonstrate the relevance of this multidisciplinary PBL within a collaborative framework for higher education in electronic, mechanical and computer engineering.

II. METHODOLOGY

A. Context reminder and Research Project Objectives

The multidisciplinary and collaborative research project described in this paper has been initiated in 2013 within the graduate school of engineering (Polytech Tours) of the University of Tours (France). Polytech Tours, which is a multi-site school, hosts 270 students in its preparatory course (in partnership with the faculty of science and technology), 850 students in the engineering specialties (5 engineering specialties in the following areas: electrical and electronic engineering, computer science, industrial computing, mechanical engineering, and urban planning and environment engineering) and 90 students in the PhD course. A significant number of pedagogical activities (for example, the research projects included in the engineering curriculum) are also supported by the research units in the field of the graduate school of engineering.

Over the last year of the engineering curriculum at Polytech Tours, the students must complete a research project over one hundred hours. Regarding the traditional PBL approach supported by the institution, all students of the same engineering specialty (e.g. regarding the electrical and electronic engineering specialty, 30 students are involved) are expected to work in pairs. They are supervised by a teacher specialized in the field. The research topics are proposed by either the research unit in the field or an industrial partner.

The case study on urban drone conception described in this article is the result of a cooperation between Polytech Tours and anindustrial partner. In particular, the research project has consisted in establishing closer links between three out of five engineering specialties offered by the institution: electrical and electronic engineering, industrial computing, and mechanical engineering. The ultimate challenge in this multidisciplinary and collaborative PBL approach is to coordinate the teams mainly according to a common schedule, and material and software resources that must be shared.

This kind of project was proposed during two successive academic years (2013-2014, and 2014-2015). However, the objectives of the study were quite different to avoid that a student cheats a competency from year to year, because he can collect and exchange information with previous students. In the first academic year (2013-2014), the project team designed and built a first prototype of the urban drone taking into consideration the industrial needs. In the academic year 2014-2015, the purpose was to add new functionalities to the urban drone, increase its robustness, and analyze its cost-effectiveness before finally becoming a marketable product.

In the next sections of the article, a feedback from two years of experience on this research project is detailed.

B. Project Team Composition and Roles of Each Partner

Each academic year, 6 grade 5 (last year of the engineering degree) students (2 in electrical and electronic engineering, 2 in industrial computing, and 2 in mechanical engineering) were involved in the research project. They were supervised by 3 teachers (one from each area of competence) during 100 hours. These engineering students worked with 4 other students from the faculty of science and technology (integrated preparatory cycle). As regard the latter, the research project should both contribute towards the assimilation of knowledge and help them to practice some basic concepts in engineering science. Moreover, this kind of study tends to promote dialogue, critical mind, and intellectual and social openness. It is important to note that the engineering students and the students in its preparatory course were evaluated using the same set of competencies. However, this does not mean that the level of requirement was the same. Finally, a group of 10 students (6 engineering students and 4 students from the integrated preparatory cycle) was particularly interesting to create a learning atmosphere where the learners were comfortable to both discuss freely about the ins and outs of the project, the allocation of roles and responsibilities, and to make mistakes without fear of criticism. For all students, urban drone represented a friendly finished industrial product. The choice of this case study greatly contributed to maintain student motivation throughout the project, since it was applicable to the real world.

For the 3 teachers, their roles were facilitative rather than didactic. They had to recognize and set up situations to ensure that the project ran smoothly while integrating technologies when appropriated. They had to ensure that all students fostered the knowledge and skills at their own pace. That could be achieved only by structuring problems and managing the learning process.

The urban drone as an end-product was proposed and supported by a start-up company that is specialized in the development of drones dedicated to aerial views. The solutions currently put forward by this company are centered on the concept of multi-rotor drone. Such marketed equipment is typically composed of 4 to 8 motors arranged in the shape of a star that are remotely-controlled. In this project, an urban drone composed of 4 motors was designed and manufactured.The start-up company contributed its expertise and technical support to both students and teaching staff. It did not have the responsibility to manage the research project, but its involvement was required for envisioning and strategizing.

C. Learning Outcomes and Methods of Assessment

As can be seen in Table I, 4 competencies were particularly assessed during the project:

- The ability to master the main scientific and technical disciplines necessary to design, deliver on, test, and validate an innovative product (competency named "C1").
- The ability to master the methods and tools for engineers necessary to fulfill the project expectations (competency named "C2").
- The ability to demonstrate capacity for teamwork and team leadership to stimulate innovation (competency named "C3").
- The ability to comply with industrial / social / environmental standards, and

society's rules and values (competency named "C4").

Adequate methods of assessment and practices were requiredto ensure that all studentswere well-supported in the learning process.

Regarding the first competency named "C1", the studentshad tomeet the level of mastery(it corresponds to an accomplishment of the activity independently).They had to be particularly proficient in establishing a functional analysis of the whole system. Several laboratory experiments (case studies) were proposed to focus on specific items of the urban drone (i.e. the mechanical part, the motor system, and the on-board electronic part). This method of assessment is helpful to deliver immediate feedback about students' performance. They can take actions to correct their problems.These issues were incorporated in the final report and presented during an oral session planned at the end of the project. The students had also met the level of mastery in sizing, designing, manufacturing, testing, and validating the functioning of the urban drone. All stages of these learning outcomes hadbeen tested during laboratory activities, had to be summarized in the final report, and be presented during the oral session. It is important to note that each student had to keep a logbook in which he had to record all significant information on a day-to-day basis. This method of assessment was helping to ensure that he was able to develop a critical analysis, and provide experience feedback.

The second competency named "C2" was focused on the mastering of the main methods and tools for engineers necessary to fulfill the project expectations. The level of mastery was required. Many case studies (laboratory experiments) were proposed to evaluate the methods used to organize the students' work to successfully meet the milestones and deliverables. This stage was particularly interesting to point out their autonomy, creativity, and openness. Another important learning outcome consisted in summarizing the main results in the final report. Moreover, those results were explained during the final oral session. One point was very challenging. Indeed, the students had to be able to interact with both specialists and non-specialists of urban drone conception. Special oral sessions in the form of frequently asked questions (FAQs) were organized by the teachers. FAQs allowed all participants (both specialists and non-specialists) to acquire information and clarifications to help them properly understand the challenges, the key milestones and deliverables that were crucial to meet the project outcomes. For the teachers, preparatory work was typically necessary to centralize all issues for organizing debates.

The third competency named "C3" was focused on teamwork and team leadership. The level of application was required (it corresponds to the accomplishment of an activity with assistance). The members' responsibilities to the group were tested through various oral situation simulation exercises (laboratory activities). Those exercises encouraged students to think about how teams should work together, and to rate the quality of collaboration. The teachers' role was very important in that case since they had to periodically check a task management chart. This chart was composed of:

- The title and objectives of each task.
- The name of the student who was responsible for task.
- The date on which task was due.
- The date on which task was completed.

The number of tasks were sufficient to evaluate the ability of each student to manage the project team. Finally, group discussions were planned to identify and anticipate trends and potential innovations around urban drone conception. These group discussions helped the students be proactive.

The last competency named "C4" evaluated the ability to comply with industrial / social / environmental standards, and society's rules and values. The students had to achieve the project objectives in compliance with the main industrial requirements in terms of quality, health / safety etc. In that case, a level of mastery was expected. All results had to be summarized in the final report, and presented during the final oral session. Society's rules and values corresponded to the exemplary behavior of each student during the project. The level of mastery was expected too. In particular, all students had to maintain regular attendance and punctuality at all stages of the study.

III. DRONE ARCHITECTURE AND STUDENTS' WORK

A. *Architecture and Operating Principle*

The urban drone manufactured during the project is an electrically powered quadcopter. It is composed of a carbon-fiber support structure, plastic body, four high-efficiency brushless motors, sensors and control board, a camera, and indoor and outdoor removable hulls. Figure 1 shows the operating diagram of the whole system. It is composed of 4 main parts: a steering system, a power supply, a brushless motor system, and an on-board electronic system.

The urban drone is fully controllable using a touchpad or a joystick. The touchpad can be replaced by a computer that integrates a graphic user interface (GUI) with LabVIEW. The GUI is in charge of reproducing the displacements of the urban drone during its flight. The power supply is composed of 14.8 V dc (direct current), 6,600 mAh Lithium Polymer (LiPo) battery, and a switched mode power supply (SMPS). The SMPS is in charge of both regulating the voltage from the battery to control the motor system, and converting it down to 5 V dc to supply the on-board electronic system, while protecting the battery against full discharge. The dc-dc converter embeds an integrated switching regulator, and a synchronous-rectified design.It warrants a high efficiency (higher than 90%). It is important to note that the choice of the LiPo battery technology is a trade-off between its cost / effectiveness ratio, and its compactness (the dimensions and the weight of the battery are 25.5 mm × 87 mm × 138 mm and 640 g, respectively). Even if its specific energy (about 150 Wh/kg) is lower than the Lithium-ion (Li-ion) technology (up to 265 Wh/kg), the LiPo battery is also chosen for safety reasons (e.g. high overload resistance, reduced electrolyte leakage).

The motor system is composed of four 920 rpm/V brushless motors. This kind of motor is chosen because of its electrical features (standard current: 15-25 A, maximum current: 30 A), and compactness (dimensions of

the stator: 28 mm × 24 mm; weight: 56 g). Each motor is coupled with an electronic speed controller (ESC). This kind of system is 3-phase inverter that embeds a pulse width modulation (PWM) control system. The output current in continuous mode is equal to 30 A. In burst mode, it can reach 40 A up to 10 seconds. The dimensions and the weight of the ESC are 55 mm × 25 mm × 9 mm and 25.8 g, respectively.

Regarding the on-board electronic system, there are two compute modules. The first one is a Raspberry Pi platform to control a camera (5 Mpx digital camera, 1,080p video). The second one is an Arduino Uno module, connected to an inertial measurement unit (IMU), to drive the brushless motor system. The two platforms can communicate using a serial interface (universal synchronous / asynchronous receiver / transmitter – USART). It is important to note that the Raspberry Pi module is helpful to capture information from the steering system.

TABLE I.
COMPETENCIES ASSESSED, LEARNING OUTCOMES, METHODS OF ASSESSMENT

Competency assessed	Learning outcome	Expected level	Method(s) of assessment

C1. Ability to master the main scientific and technical disciplines necessary to design, deliver on, test, and validate an innovative product.	To analyze and develop a product: mastery of functional analysis.	Level of expertise***.	Laboratory experiments. Report. Oral presentation.
	To apply knowledge to size, design, manufacture, test, and validate a product.	Level of mastery**.	Laboratory experiments. Report. Oral presentation.
	To develop a critical analysis, and provide experience feedback.	Level of mastery**.	Project journal / Logbook. Report. Oral presentation.
	To learn new skills.	Level of mastery**.	Laboratory experiments. Report. Oral presentation.
C2. Ability to master the methods and tools for engineers necessary to fulfill the project expectations.	To integrate a project management system. To plan and organize work to successfully meet milestones and deliverables.	Level of mastery**.	Laboratory experiments.
	To summarize the results and report them to wider audiences including those without a technical background.	Level of mastery**.	Frequently asked questions. Report. Oral presentation.
	To develop autonomy, creativity and openness.	Level of mastery**.	Laboratory experiments.
C3. Ability to demonstrate capacity for teamwork and team leadership to stimulate innovation.	To be a team-player and foster a dynamic collaboration.	Level of application*.	Laboratory experiments.
	To demonstrate team leadership.	Level of application*.	Laboratory experiments.
	To identify and anticipate trends, potential innovations in the field.	Level of application*.	Group discussions and sharing of resources and ideas.
C4. Ability to comply with industrial / social / environmental standards, and society's rules and values.	To achieve the project objectives in compliance with industrial procedures (quality, health / safety…).	Level of mastery**.	Report. Oral presentation.
	To apply the team's strategies, values and codes.	Level of application*.	Laboratory experiments.
	To have an exemplary behavior (regular attendance, punctuality…).	Level of mastery**.	Laboratory experiments.

*Level of application: accomplishment of the activity with assistance. **Level of mastery: accomplishment of the activity independently. ***Level of expertise: personal contribution to the evolution of the activity, and transfer of know-how.

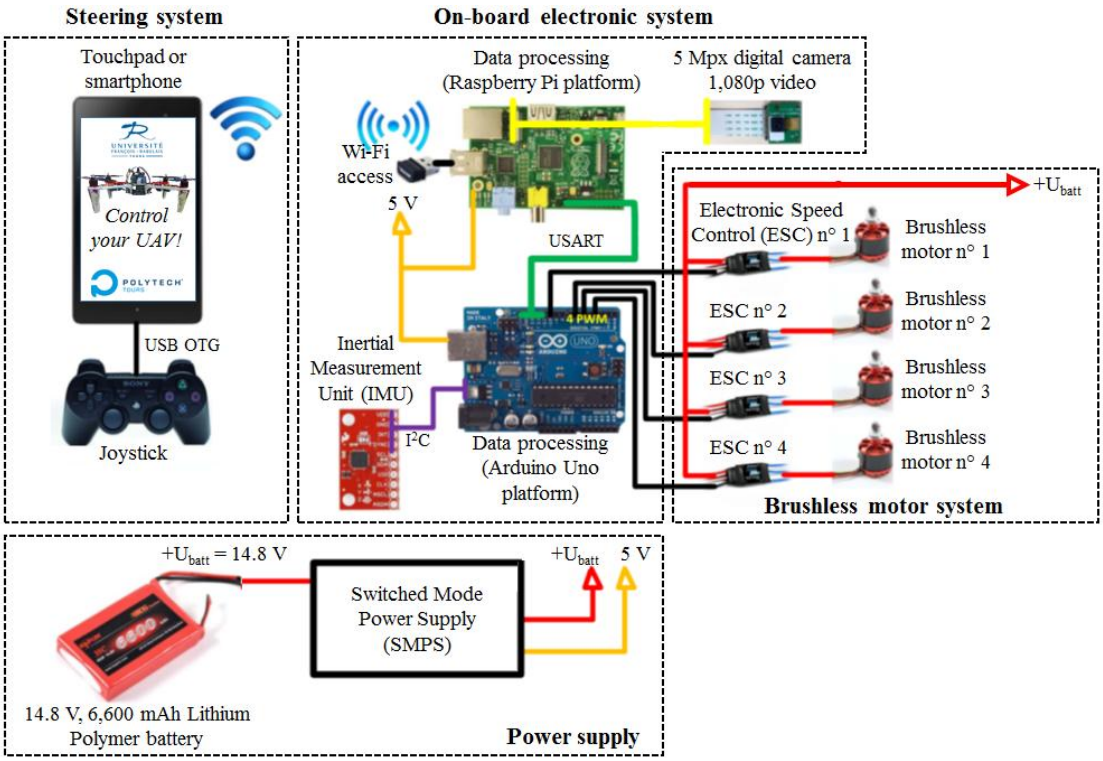

Figure 1. Operating diagram of the urban drone

B. *Summary of the Students' Work*

1) *Operational Needs, and Prototype Development*

This phase, which was particularly fundamental in the first year of the project,consisted indemonstrating that the various components of the urban drone were well-sized according to the operational needs. The aim was also to propose a prototype of the whole system. In particular, this prototype should be improved during the second academic year by adding new functionalities. For the students, this phase provided the opportunity to explore concepts based on operational needs, existing technology availability, risks and accessibility.It is important to note that the students of the class of 2014-2015 had all results of their colleagues to support continuous improvement.

The functional analysis of the urban drone started with the estimationof the flight duration. The calculation was based on the electricity source (14.8 V, 6,600 mAh LiPo battery) that was provided by the start-up company. The students estimated the power consumption of each device of the whole system in steady-state from its functional specifications and an extensive literature review. The results are summed up in Table II. The urban drone consumes only about 266 watts in steady-state operation. From its electrical features (14.8 V, 6,600 mAh), the energy consumption of the battery is about 98 Wh. Therefore, the flight duration is slightly above 20 minutes. This value is higher than the typical one (15 minutes) for marketed urban drones.

Figure 2 shows the prototype of the UAV that was fully developed by the students in 2013-2014. A marketed injection-molded plastic frame was used. This kind of frame is composed of 4 arms. Each brushless motor was directly positioned at the end of each arm. The students designed and manufactured 4 pads that were fixed on the arms. Each pad is composed of a printed circuit board (PCB) that incorporates a set of 5 LEDs. The aim was to correctly assess the urban drone's displacements (forwards / backwards). The LiPo battery was fixed at the backside of the frame thanks to the arms. Then, the students built two mounting boxes to protect the on-board electronic part against mechanical shocks. To this end, they used 3D printers available into the fabrication laboratory of the graduate school of engineering. Regarding the brushless motor system, the electronic speed controllers were put on the arms of the system. It is important to note that the students achieved the electric wiring of the urban drone. Finally, the whole system meets the specifications imposed by the start-up company. The urban drone is compact (330 mm × 330 mm × 150 mm) and light (1.56 kg), and the on-board electronic system is relatively simple and quite inexpensive (about 20% of the total cost of the prototype). This prototype was submitted to the start-up company and presented via video conference. After the review, authority was given to the team to test the solution and propose some improvements.

TABLE II.
POWER CONSUMPTION ESTIMATION OF THE URBAN DRONE IN STEADY-STATE

Element of the urban drone	Power consumption (W)
4 brushless motors	256
4 electronic speed controllers	2.5
1 set of LEDs	6
1 Raspberry Pi platform coupled with a camera	1.65
1 Arduino Uno platform	0.25
TOTAL ➔	266.4

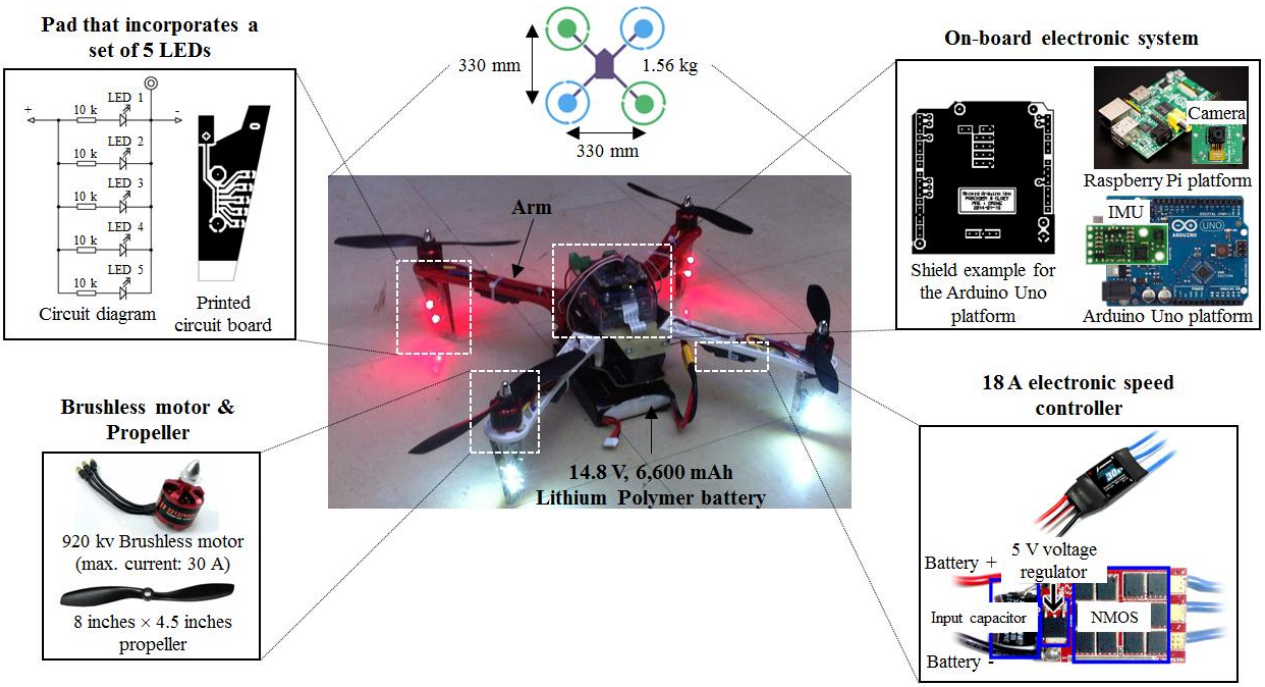

Figure 2. Example of the prototype of the urban drone manufactured by the students in 2013-2014

2) Validation of the Solution, and Proposals for Improvement

Before the validation of the solution, the students confirmed the correct functioning of the communication between the steering system and the urban drone. In particular, it was possible to drive correctly the brushless motors by pressing the buttons of the joystick. The students also verified that information from the IMU could easily be collected. All these steps confirmed that the industrial computing part was correctly set up.

Then, the prototype was thoroughly tested.Before full-scale tests, the students evaluated the correct functioning of the prototype in a secure environment. Testing was conducted at the laboratories of the graduate school of engineering. Those tests were approved by the start-up company. In particular, the drone was fastened by its 4 arms to a heavy framework. The aim was to ensure its stability and precision in case of low flying heights (from a few centimeters to nearly 1 m). Then, outdoor tests were performed under the supervision of the start-up company. The experimental results revealed that each brushless motor can deliver a thrust of about 700 g. Thus, the whole system can provide a thrust of about 2.8 kg, which is sufficient for its flight.

However, the user did not have information about the autonomy of the battery. It was a problem, particularly in case of an extended flight of the urban drone.As can be seen in Figure 3, to solve this issue and avoid the crash of the UAV, the students proposed an electronic system to measure the voltage across the battery and provide visual and audible warnings. This solution was validated by the start-up company. It was implemented by the students in the second year of the project.

One of the major drawback of the existing prototype was also the wireless communication (Wi-Fi) between the steering system and the on-board electronic part. Indeed, it was not possible to control the urban drone for distances over 100 m. To solve this issue, the students proposed to use XBeeRF modules which represented embedded solutions providing wireless end-point connectivity to the UAV. This kind of module uses the IEEE 802.15.4 networking protocol for fast point-to-multipoint or peer-to-peer networking. Using this technology, it could be possible to control the urban drone over a distance of up to one kilometer. To implement the solution in 2014-2015, two RF modules were necessary: the first one coupled with an antenna at the steering system side, and the second one at the on-board electronic system side. Regarding the on-board electronic part, the Arduino Uno platform could be coupled with an Arduino Wireless XBee shield. Moreover, the students proposed to replace the existing camera (which was controlled by the Raspberry Pi platform) by an autonomous camera. Therefore, the Raspberry Pi module could be removed thanks to this solution. The cost of XBee router was about the same as the Raspberry Pi platform. Nonetheless, this solution may be more expensive because of the autonomous camera. For instance, the students proposed to use a GoPro camera. Such device increases the cost of the whole system (the costs of a camera module for the Raspberry Pi platform and a GoPro camera are about 20 Euros and 400 Euros, respectively). Despite its extra cost, this solution was considered by the start-up company as a potential alternative. The main reason for this is thatXBee module has a typical function named “Doze” which authorizes the system to hibernate. Using this operating mode, the average power consumption of the XBee module was about 0.1 mW.

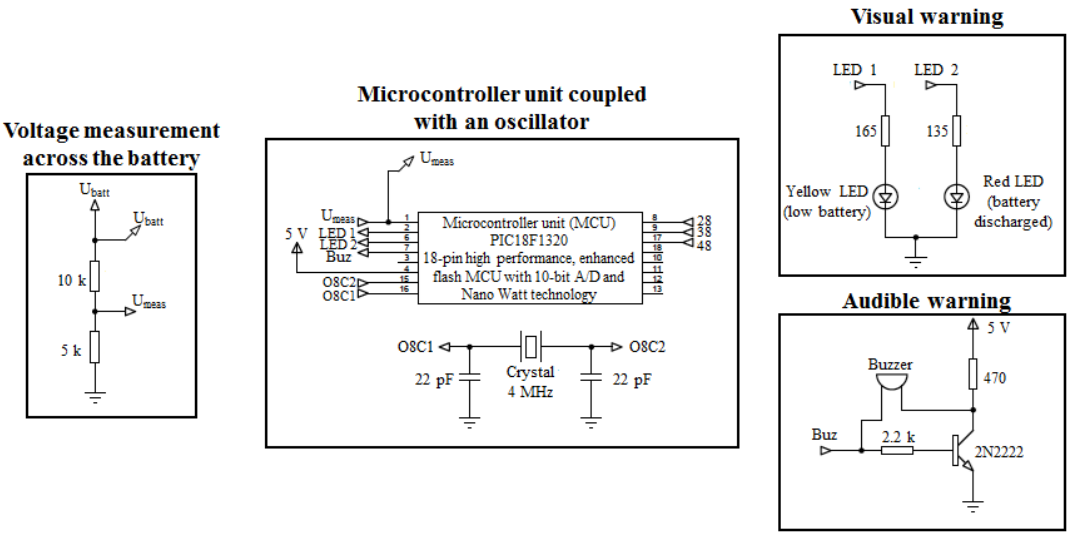

Figure 3. Proposal (electric diagram) for a battery alarm system. Such a solution was implemented in the final prototype of the urban drone in 2014-2015

IV. DISCUSSION

The aim of this section of the manuscript is to demonstrate the relevance of this teaching method. First of all, the transcripts of grades assigned by the teachers are analyzed to convey the level of achievement of each student at the end of the course. Then, the multidisciplinary and multi-partner PBL approach is evaluated through five-point Likert scaling.

A. Transcripts of grades

Each academic year, all students' skills were evaluated by the teachers. The competencies listed in Table I were particularly rated.

For each competency, all learning outcomes were rated using a numerical value based on a 0-5 scale with higher scores representing better performances and greater achievements. An equivalent grade was assigned to each mark of the 0-5 scale, with "A" being the highest and "Fail" denoting failure. A competency was considered to be validated when the average grade of the related sub-competencies was at least equal to "C".

All students validated the course whatever the academic year. Table III shows the score distributions of the learners surveyed. In comparing both academic years, the results are approximately the same. The average and standard deviation of all learning outcomesare equal to 4.2 and 0.3, respectively. This means that, on average, a student reached a grade slightly higher than "B". Regarding a traditional PBL approach supported by the institution (research project led by 2 engineering students within the same specialty and supervised by a teacher), the average grade is typically between "C" and "B". As a consequence, this study points out very positive experiences. This should encourage most of teachers to experiment this approach to learning. From Table III, the competency entitled "Project control and decision-making" returned results which were worse than expected.The students must make extra efforts to work independently. During the research project, the teachers spent too much timewith the learners, and sometimes solving complex issues for them. This point will require particular vigilance for the next research projects using the multidisciplinary and multi partner PBL approach.

B. Five-point Likert scaling

All students involved in the research project completed a detailed questionnaire, which was composed of 8 items, to gather their perceptions about this teaching approach. Each item in the survey was quantified by a Likert-scale of 1 to 5 (1 = Strongly disagree [SD], 2 = Disagree [D], 3 = Neutral [N], 4 = Agree [A], 5 = Strongly agree [SA]). Likert scaling can be easily adopted to measure students' attitude toward engineering and technology [15]. The popularity of the method comes from several facts:

- This kind of scaling can be easily constructed and modified.
- The method has demonstrated good reliability.
- It is possible to collect and analyze a large quantity of data with less effort and in less time.

Table IV summarizes the results. A total satisfaction score of about 84% was obtained, whatever the academic year (84% in 2013-2014, and 84.5% in 2014-2015). This is an extremely positive outcome. Despite these optimistic results, additional communication efforts will have to be increased for any future research project using this teaching approach. In particular, roles and responsibilities of the partners will still need to be clearly defined. The engagement of the industrial partner will probably have to be increased in all steps of the project, from the definition of specifications to the evaluation of students' skills.

V. CONCLUSION

This paper provides firsthand experience of multidisciplinary PBL implemented in a French graduate school of engineering during two successive academic years. The main topic addressed has consisted in studying and manufacturing an urban drone in a multi-partner framework. This kind of industrial end-product crosses several scientific disciplines including electrical and electronic engineering, on-board electronics, and mechanical engineering. Four partners were particularly involved in this research project within 100 hours: 3 departments of the school of engineering (electrical and

electronic engineering, industrial computing, and mechanical engineering), and a start-up company.

To complete the project within its allocated time, the ultimate challenge had consisted in better coordinating the various phases (planning of the workpackages, management of human, material and financial resources), while ensuring that the students acquire knowledge and skills.

The results demonstrate that this learning approach is overwhelmingly positive since it empowers student learning. In this study, the students tookparticularly greater responsibility. This teaching method also supports and encourages more exchange between the learners and the partners.

Regarding accreditation organizations, such an approach stimulates a student project by providing a multi-disciplinary team with both clearly identified responsibilities and ambitious targets.

REFERENCES

[1] M. Peris-Ortiz, F. J. Garrigós-Simón, I. Gil-Pechuán, *Innovation and Teaching Technologies – New Directions in Research, Practice and Policy*, Springer Science & Business Media, 2014, pp. 75–85.

[2] J. Heywood, *The Assessment of Learning in Engineering Education: Practice and Policy*, Wiley-IEEE Press, 1st edition, 2016, pp. 133–156.

[3] S. Azizi Ghanbari, "Competency-Based Learning," in *Encyclopedia of the Sciences of Learning*, New York, NY: Springer-Verlag, 2012, pp. 668–671.

[4] T. V. Sidorenko, and V. Z. Yampolsky, "The System Analysis in Language Teaching and Learning for Technical Students in Russia," *International Journal of Emerging Technologies in Learning*, vol. 10, no. 5, pp. 22–28, 2015.

[5] A. Menacho, M. Castro, and C. M. Pérez-Molina, "Competency-based learning management systems: Practices using remote laboratories to improve the use of the subjects and get required competences," *Proceedings of the 2016 13th International Conference on Remote Engineering and Virtual Instrumentation (REV)*, pp. 109–111, 2016.

[6] A. Patil, and G. Codner, "Accreditation of engineering education: review, observations and proposal for global accreditation," *European Journal of Engineering Education*, vol. 32, no. 6, pp. 639–651, 2007.

[7] V. M. López-Pastor, P. Pintor, B. Muros, and G. Webb, "Formative assessment strategies and their effect on student performance and on student and tutor workload: the results of research projects undertaken in preparation for greater convergence of universities in Spain within the European Higher Education Area (EHEA)," *Journal of Further and Higher Education*, vol. 37, no. 2, pp. 163–180, 2013.

[8] D. L. Fried-Booth, *Resource Books for Teachers: Project Work (Second Edition)*, Oxford, Oxford University Press, 2015.

[9] J. Quay, J. Seaman, *John Dewey and Education Outdoors – Making Sense of the 'Educational Situation' through more than a Century of Progressive Reforms*, Springer Science & Business Media, Sense Publishers, The Netherlands, 2013, pp. 13–44.

[10] Yu. Yu. Kovalyova, A. V. Soboleva, and A. T. Kerimkulov, "Project Based Learning in Teaching Communication Skills in English as a Foreign Language to Engineering Students," *International Journal of Emerging Technologies in Learning*, vol. 11, no. 4, pp. 153–156, 2016.

[11] R. Lozano, R. Lukman, F. J. Lozano, D. Huisingh, and W. Lambrechts, "Declarations for sustainability in higher education: becoming better leaders, through addressing the university system," *Journal of Cleaner Production*, vol. 48, pp. 10–19, 2013.

[12] G. F. Issa, H. A. EbGhalayini, A. F. Shubita, and M. H. Abu-Arqoub, "A Framework for Collaborative Networked Learning in Higher Education: Design & Analysis," *International Journal of Emerging Technologies in Learning*, vol. 9, no. 8, pp. 32–37, 2014.

[13] L. C. Moll, *L. S. Vygotsky and Education*, Routledge Taylor and Francis Group New York and London, 2014, pp. 14–44.

[14] T. Krajník, V. Vonásek, D. Fišer, and J. Faigl, "AR-Drone as a Platform for Robotic Research and Education," in *Research and Education in Robotics – EUROBOT 2011*, Springer Berlin Heidelberg, 2011, pp. 172–186.

[15] A. Shana, and E. S. Abulibdehb, and A. T. Kerimkulov, "Engaging Students through Blogs: Using Blogs to Boost a Course Experience," *International Journal of Emerging Technologies in Learning*, vol. 10, no. 1, pp. 30–38, 2015.

AUTHORS

S. Jacquesreceived the Ph.D. degree in electronic engineering from University of Tours, Tours, France, in 2010. Since 2012, he has been with the Electrical and Electronic Engineering Department of the graduate school of engineering named Polytech Tours as an Assistant Professor. He has also been with the research group on materials, microelectronics, acoustics and nanotechnology (GREMAN CNRS UMR 7347). His learning and research activities include electronic systems, power converters, renewable energies (photovoltaics) and reliability of power systems (e-mail: sebastien.jacques@univ-tours.fr).

S. Bisseyreceived the engineering degree in electrical and electronic engineering from Polytech Tours, University of Tours, Tours, France, in 2013. He is currentlycompleting his Ph.D. degree in electronic engineering at the University of Tours. In particular, he is with research group on materials, microelectronics, acoustics and nanotechnology (e-mail: sebastien.bissey@univ-tours.fr).

A. Martin is currently an Associate Professor of electrical engineering in the Electrical and Electronic Engineering Department of the graduate school of engineering named Polytech Tours, University of Tours, Tours, France (e-mail: a.martin@univ-tours.fr).

Submitted, 01July 2016. Published as resubmitted by the authors on 01September 2016.

TABLE III.
TRANSCRIPTS OF GRADES: SCORE DISTRIBUTIONS. THE STUDENTS' RESULTS OF THE CLASS OF 2013 AND THE CLASS OF 2014 APPEAR IN BLUE AND GREEN, RESPECTIVELY. FOR EACH CLASS, 10 STUDENTS WERE SURVEYED (6 ENGINEERING STUDENTS AND 4 STUDENTS FROM THE INTEGRATED PREPARATORY CYCLE).

Competency (C) assessed and learning outcomes (LO)	Grade A	Grade B	Grade C	Grade D	Grade E	Fail
C1. Ability to master the main scientific and technical disciplines necessary to design, deliver on, test, and validate an innovative product.						
LO 1.1. To analyze and develop a product: mastery of functional analysis.	40.0% 30.0%	40.0% 50.0%	20.0% 20.0%	0.0% 0.0%	0.0% 0.0%	0.0% 0.0%
LO 1.2. To apply knowledge to size, design, manufacture, test, and validate a product.	30.0% 50.0%	50.0% 30.0%	10.0% 10.0%	10.0% 10.0%	0.0% 0.0%	0.0% 0.0%
LO 1.3. To develop a critical analysis, and provide experience feedback.	50.0% 50.0%	40.0% 30.0%	10.0% 20.0%	0.0% 0.0%	0.0% 0.0%	0.0% 0.0%
LO 1.4. To learn new skills.	50.0% 60.0%	40.0% 30.0%	10.0% 10.0%	0.0% 0.0%	0.0% 0.0%	0.0% 0.0%
C2. Ability to master the methods and tools for engineers necessary to fulfill the project expectations.						
LO 2.1. To integrate a project management system. To plan and organize work to successfully meet milestones and deliverables.	20.0% 20.0%	50.0% 60.0%	30.0% 20.0%	0.0% 0.0%	0.0% 0.0%	0.0% 0.0%
LO 2.2. To summarize the results and report them to wider audiences including those without a technical background.	30.0% 20.0%	40.0% 40.0%	30.0% 40.0%	0.0% 0.0%	0.0% 0.0%	0.0% 0.0%
LO 2.3. To develop autonomy, creativity, and openness.	40.0% 30.0%	20.0% 40.0%	30.0% 30.0%	10.0% 0.0%	0.0% 0.0%	0.0% 0.0%
C3. Ability to demonstrate capacity for teamwork and team leadership to stimulate innovation.						
LO 3.1. To be a team player and foster a dynamic collaboration.	60.0% 50.0%	40.0% 50.0%	0.0% 0.0%	0.0% 0.0%	0.0% 0.0%	0.0% 0.0%
LO 3.2. To demonstrate team leadership.	40.0% 40.0%	30.0% 40.0%	20.0% 10.0%	10.0% 10.0%	0.0% 0.0%	0.0% 0.0%
LO 3.3. To identify and anticipate trends, potential innovations in the field.	20.0% 30.0%	40.0% 20.0%	30.0% 40.0%	10.0% 10.0%	0.0% 0.0%	0.0% 0.0%
C4. Ability to comply with industrial / social / environmental standards, and society's rules and values.						
LO 4.1. To achieve the project objectives in compliance with industrial procedures (quality, health / safety…).	50.0% 50.0%	30.0% 30.0%	20.0% 20.0%	0.0% 0.0%	0.0% 0.0%	0.0% 0.0%
LO 4.2. To apply the team's strategies, values, and codes.	60.0% 50.0%	40.0% 50.0%	0.0% 0.0%	0.0% 0.0%	0.0% 0.0%	0.0% 0.0%
LO 4.3. To have an exemplary behavior (regular attendance, punctuality…).	50.0% 70.0%	50.0% 30.0%	0.0% 0.0%	0.0% 0.0%	0.0% 0.0%	0.0% 0.0%

TABLE IV.
SATISFACTION SURVEY SUMMARY FROM LIKERT SCALING. THE STUDENTS' RESULTS OF THE CLASS OF 2013 AND THE CLASS OF 2014 APPEAR IN BLUE AND GREEN, RESPECTIVELY. FOR EACH CLASS, 10 STUDENTS WERE SURVEYED (6 ENGINEERING STUDENTS AND 4 STUDENTS FROM THE INTEGRATED PREPARATORY CYCLE)

Question	**SD = 1**	**D = 2**	**N = 3**	**A = 4**	**SA = 5**	**Average score**	**Satisfaction score**
1. Scope, ends and results, interactions with partners (engineer students, teachers, and industrial partners) are clear and explicit.	0.0% 0.0%	0.0% 0.0%	20.0% 10.0%	30.0% 40.0%	50.0% 50.0%	4.3 4.4	86.0% 88.0%
2. Terms and conditions for project assessment are clear, explicit and well-known by the engineering students and tutors.	0.0% 0.0%	0.0% 0.0%	0.0% 0.0%	50.0% 50.0%	50.0% 50.0%	4.5 4.5	90.0% 90.0%
3. Urban drone is an appropriate platform usable for multidisciplinary PBL within a collaborative framework.	0.0% 0.0%	0.0% 0.0%	0.0% 0.0%	10.0% 20.0%	90.0% 80.0%	4.9 4.8	98.0% 96.0%
4.Multidisciplinary research project reflects the knowledge and skills acquired by students during engineering training (scientific, technical, economic, financial, industrial, behavioral…).	0.0% 0.0%	0.0% 0.0%	30.0% 20.0%	50.0% 50.0%	20.0% 30.0%	3.9 4.1	78.0% 82.0%
5. Multidisciplinary PBL within a collaborative framework encourages engineering students to be active throughout the research project period.	0.0% 0.0%	0.0% 0.0%	0.0% 0.0%	40.0% 50.0%	60.0% 50.0%	4.6 4.5	92.0% 90.0%
6. Multidisciplinary PBL within a collaborative framework facilitates communication between students and teachers.	0.0% 0.0%	10.0% 10.0%	20.0% 10.0%	50.0% 60.0%	20.0% 20.0%	3.7 3.9	74.0% 78.0%
7.Multidisciplinary PBL within a collaborative framework encourages thinking and collaboration.	0.0% 0.0%	0.0% 0.0%	0.0% 0.0%	60.0% 50.0%	40.0% 50.0%	4.4 4.5	88.0% 90.0%
8.Multidisciplinary PBL within a collaborative framework brings new opportunities of learning by involving external people.	0.0% 0.0%	10.0% 0.0%	30.0% 20.0%	60.0% 60.0%	0.0% 20.0%	3.5 4.0	70.0% 80.0%